Imperia 6 Column Bench 480 x 850mm. Painted

Technical Drawing

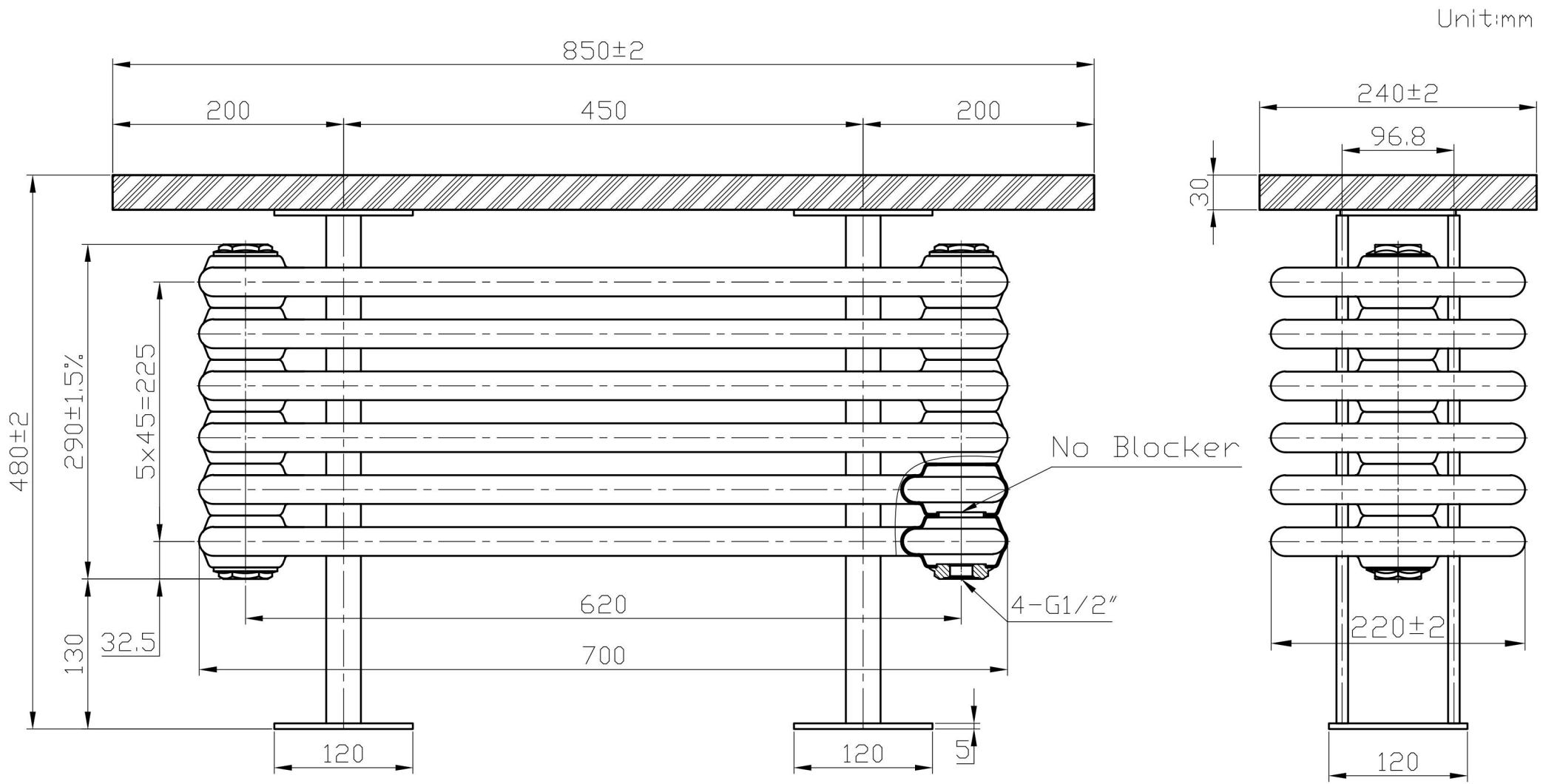

Eastbrook

Eastbrook Road, Gloucester GL4 3DB

Technical Helpline : 01452 317890

Mon - Fri / 8am - 5pm

Email : technical@eastbrookco.com